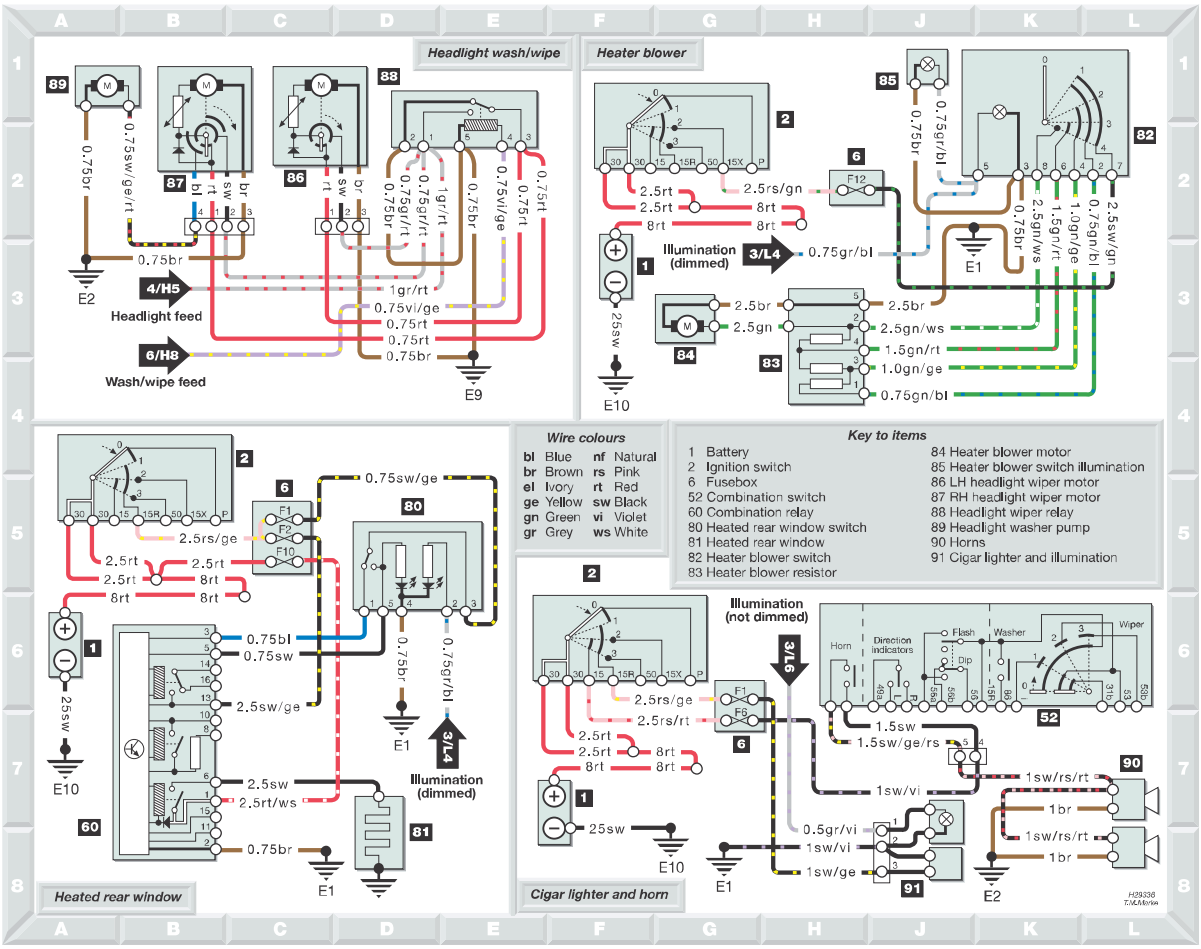

Diagram 7 : Headlight wash/wipe, heated rear window, heater blower, horn and cigar lighter